目　　录
CONTENTS

零件样本
Parts Book

A 机壳分组件 Machine Frame & Miscellaneous Cover Components ····· 1

B 上轴、挑线分组件 Main Shaft & Thread Take-up Cover Components ····· 3

C 抬压脚分组件 Hang Lifter & Tension Release Components ····· 7

D 勾线分组件 Hook Of Driving Shaft Components ····· 9

E 送料分组件 Feed Mechanism Components ····· 11

F 送料调节分组件 Feed Regulating Components ····· 15

G 剪线分组件 Thread trimmer Components ····· 17

H 电控分组件 Drive-by-wire Components ····· 19

I 润滑分组件 Lubrication Components ····· 21

J 油盘、膝抬压脚分组件 Presser Foot Components Of Oil Plate Knee Lift ····· 23

K 过线架分组件 Components Of Thread-running Stand ····· 25

L 附件 Auxiliaries ····· 27

A

机壳分组件

Machine Frame & Miscellaneous Cover Components

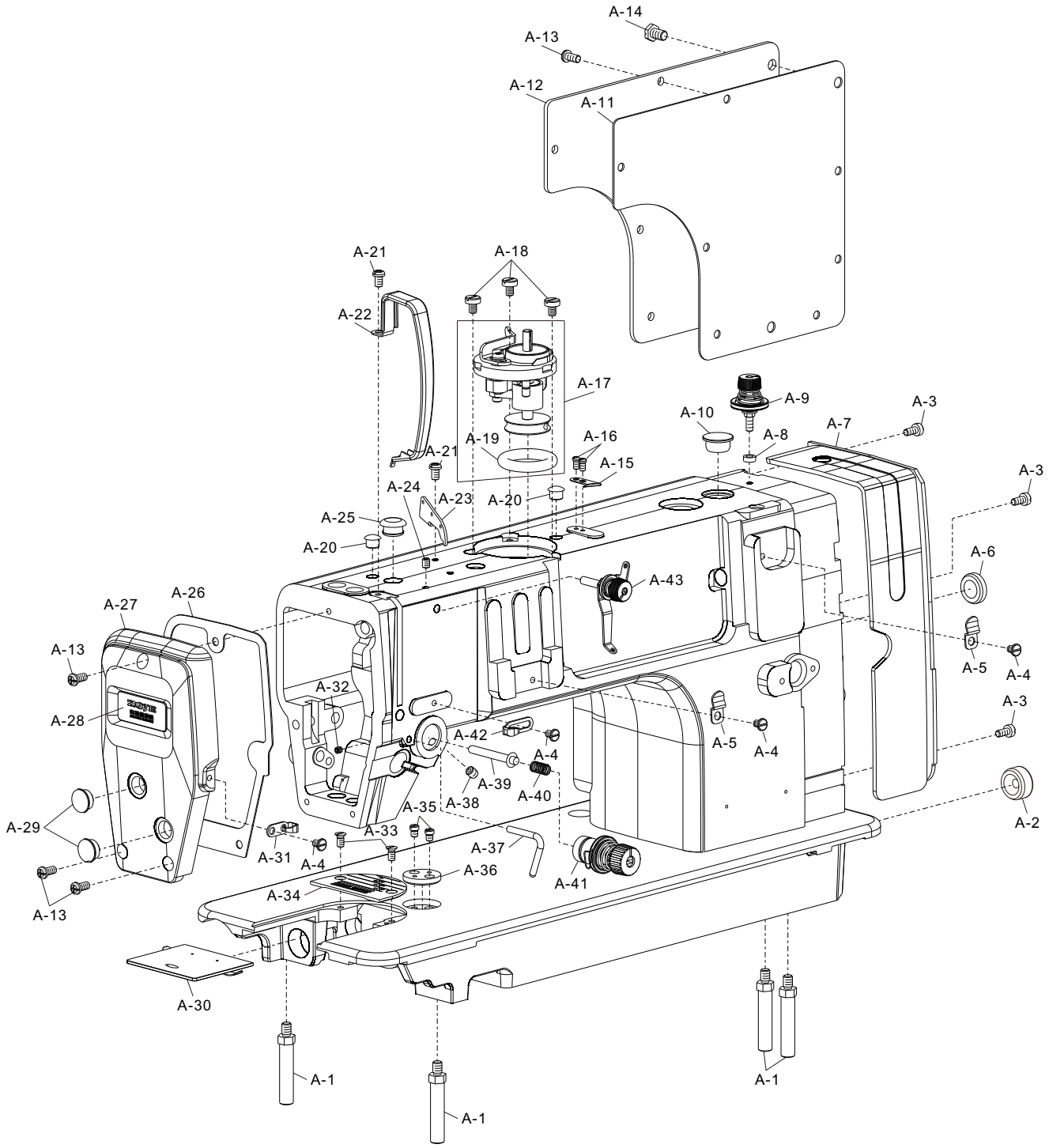

A

机壳分组件
Machine Frame & Miscellaneous Cover Components

序 号 Ref. No.	件 号 Part No.	名 称	Name of part	数 量 QTY	备 注 Remark
A-1	10002577	底板支柱	Bed screw stud	4	
A-2	10008941	橡胶塞	Rubber plug	1	
A-3	10010066	SM11/64"×40螺钉	Screw SM11/64"×40	3	
A-4	10008973	SM11/64"×40螺钉	Screw SM11/64"×40	4	
A-5	10062047	滑扣簧	Slide buckle	2	
A-6	10008975	橡胶塞	Rubber plug	1	
A-7	10063822	塑料标识板	Plastic plate	1	
A-8	10062565	绕线夹线器垫圈	Washer	1	
A-9	10062049	绕线夹线器组件	Bobbin thread tension ASM	1	
A-10	10009576	橡胶塞	Rubber plug	1	
A-11	10062030	后窗板垫	Side plate gasket	1	
A-12	20024052	后窗板	Side plate	1	
A-13	10008972	SM3/16″×28螺钉	Screw SM3/16″×28	10	
A-14	10062046	安装接头螺钉	Screw	2	
A-15	10011149	绕线切刀	Thread cutter	1	
A-16	10050423	SM9/64"×40螺钉	Screw SM9/64"×40	2	
A-17	10031086	绕线器	Bobbin wider ASM.	1	
A-18	10004380	SM3/16″×32螺钉	Screw SM3/16″×32	3	
A-19	10008773	橡胶轮	Rubber ring	1	
A-20	10008943	橡胶塞	Rubber ring	2	
A-21	10008934	SM3/16″×28螺钉	Screw SM3/16″×28	2	
A-22	10014082	挑线杆护罩	Thread take-up lever cover	1	
A-23	10052992	过线板	Thread tension guide	1	
A-24	10041529	SM3/16″×28螺钉	Screw SM3/16″×28	1	
A-25	10008942	橡胶塞	Rubber ring	1	
A-26	10062031	面板垫	Face plate gasket	1	
A-27	20024053	面板	Face plate	1	
A-28	10062054	面板装饰牌	Decorative board	1	
A-29	10008977	橡胶塞	Rubber ring	2	
A-30	10013706	推板部件	Push plate ASM.	1	
A-31	10008937	左线钩	Arm thread guide left	1	
A-32	10009074	M4螺钉	Screw M4	1	
A-33	10009005	SM11/64″×40螺钉	Screw SM11/64″×40	2	
A-34	10052464	针板组件	Needle plate	1	
A-34	10014459	针板组件	Needle plate	1	-5
A-34	10052350	针板组件	Needle plate	1	S7/H
A-35	10004374	SM11/64″×40螺钉	Screw SM11/64″×40	2	
A-36	10004373	限位挡片	Ruler plate	1	
A-37	10039823	缓线钩	Presser bar thread guide	1	
A-38	10006264	SM15/64″×28螺钉	Screw SM15/64″×28	1	
A-39	10062374	松线辅钉	Tension release supporting pin	1	
A-40	10050348	弹簧	Spring	1	
A-41	10062050	夹线器部件	Thread take-up device	1	
A-42	10008940	右线钩	Arm thread guide right	1	
A-43	10062051	上夹线器部件	Top thread tension ASM	1	

“ * ” 具体内容需向客服咨询
“ * ” Specific content need to consult customer service

B

上轴、挑线分组件
Main Shaft & Thread Take-up Cover Components

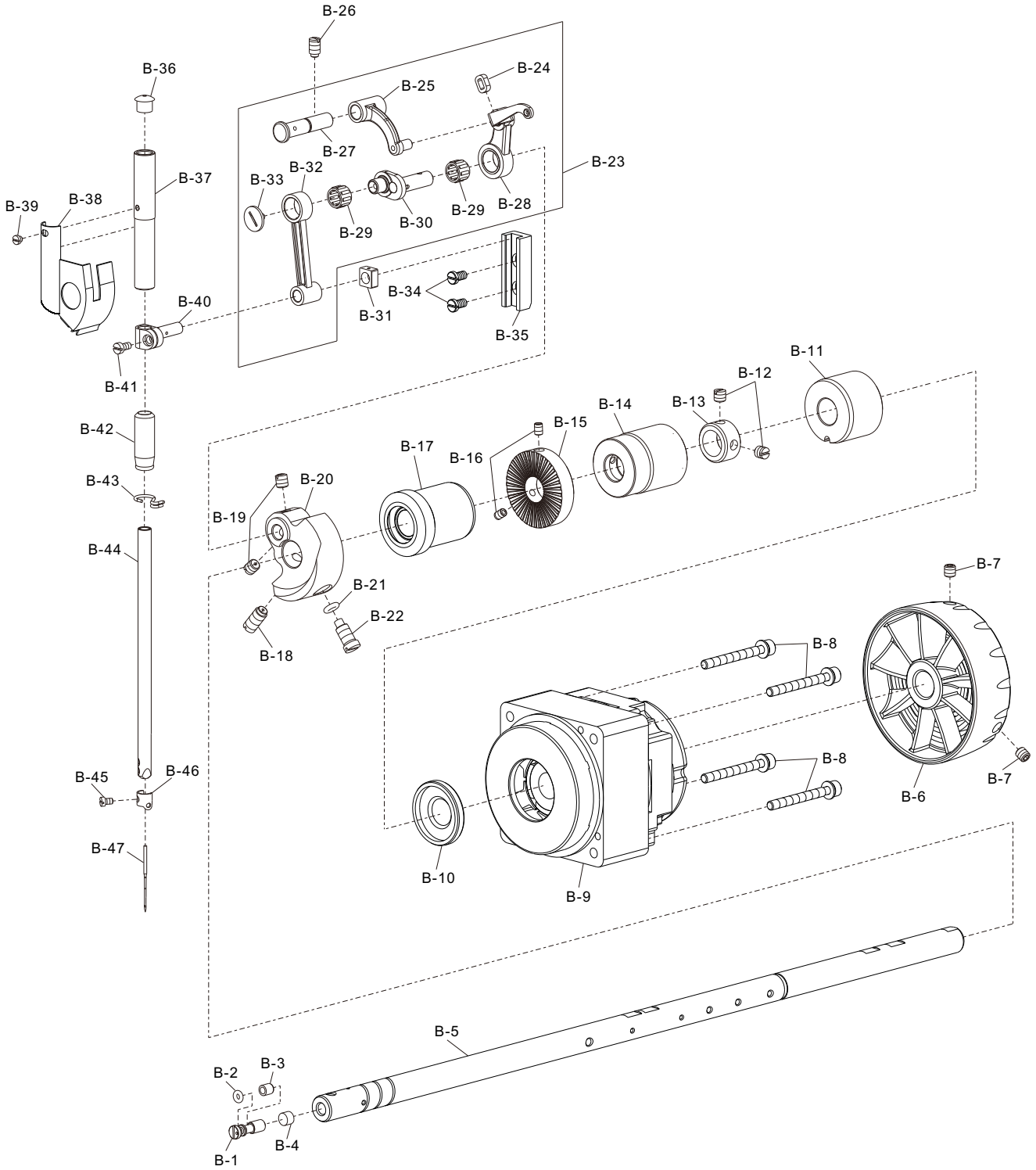

B

上轴、挑线分组件
Main Shaft & Thread Take-up Cover Components

序 号 Ref. No.	件 号 Part No.	名 称	Name of part	数 量 QTY	备 注 Remark
B-1	10010504	油量调节销	Adjusting pin	1	
B-2	10010538	6.46×1.78 0形圈	O-ring 6.46×1.78	1	
B-3	10010540	油量调节销套	Sleeve of adjusting pin	1	
B-4	10010541	毛毡	Roler felt	1	
B-5	10062382	上轴	Main shaft	1	
B-6	20023713	上轮	Head wheel	1	
B-7	10011232	M6×6螺钉	Screw M6×6	2	
B-8	10059025	M5×35螺钉组件	Screw M5 ASM.	4	
B-9	10058054	分体电机组件	Motor ASM.	1	
B-10	10058049	油封	Oil seal	1	
B-11	10056893	上轴后轴套	Shaft sleeve	1	
B-12	10005020	SM1/4"×40螺钉	Screw SM1/4"×40	2	
B-13	10010542	挡圈	Thrust collar	1	
B-14	10007239	上轴中轴套	Shaft sleeve	1	
B-15	10004472	绕线主动轮	Driving wheel	1	
B-16	10012062	SM11/64″×40螺钉	Screw SM11/64″×40	2	
B-17	10055615	上轴前轴套	Shaft sleeve	1	
B-18	10010082	SM9/32″×28螺钉	Screw SM9/32″×28	1	
B-19	10010065	SM1/4"×40螺钉	Screw SM1/4"×40	2	
B-20	10012203	针杆曲柄	Crank	1	
B-20	10012858	针杆曲柄	Crank	1	-5/H
B-21	10010534	9.2×2.4 0形圈	O-ring 9.2×2.4	1	
B-22	10010545	针杆曲柄定位螺钉	Screw	1	
B-23	20013230	挑线杆组件	Thread take-up lever ASM.	1	
B-23	20017446	挑线杆组件	Thread take-up lever ASM.	1	S7
B-23	20014717	挑线杆组件	Thread take-up lever ASM.	1	-5
B-23	20016366	挑线杆组件	Thread take-up lever ASM.	1	H
B-24	10010539	挑线杆防油圈	Oil resistant cover	1	
B-25	10010535	挑线连杆	Connecting rod	1	
B-25	10005936	挑线连杆	Connecting rod	1	H
B-26	10010083	SM15/64″×28螺钉	Screw SM15/64″×28	1	
B-27	20019236	挑线连杆销组件	Pin ASM.	1	
B-28	10038474	挑线杆	Thread take-up lever	1	
B-28	10004158	挑线杆	Thread take-up lever	1	S7
B-28	10005939	挑线杆	Thread take-up lever	1	H
B-29	10014107	K8×12×7.8滚针轴承	Needle bearing K8×12×7.8	2	
B-30	10004144	挑线曲柄部件	Crank ASM.	1	
B-30	10005937	挑线曲柄部件	Crank ASM.	1	-5/H
B-31	10053559	针杆连接柱滑块	Sliding block	1	
B-32	10010592	针杆连杆	Connecting rod	1	
B-33	10010537	挑线曲柄左旋螺钉	Screw	1	
B-34	10043360	滑块导轨螺钉	Screw	1	
B-35	10053558	滑块导轨	Slide guide	1	
B-36	10010587	橡胶塞	Rubber plug	1	
B-37	10011063	针杆上轴套	Shaft sleeve	1	
B-38	10062045	面部防油板部件	ARM oil shield ASM.	1	
B-39	10005558	SM1/8"×44螺钉	Screw SM1/8"×44	1	

“ * ” 具体内容需向客服咨询
“ * ” Specific content need to consult customer service

B

上轴、挑线分组件
Main Shaft & Thread Take-up Cover Components

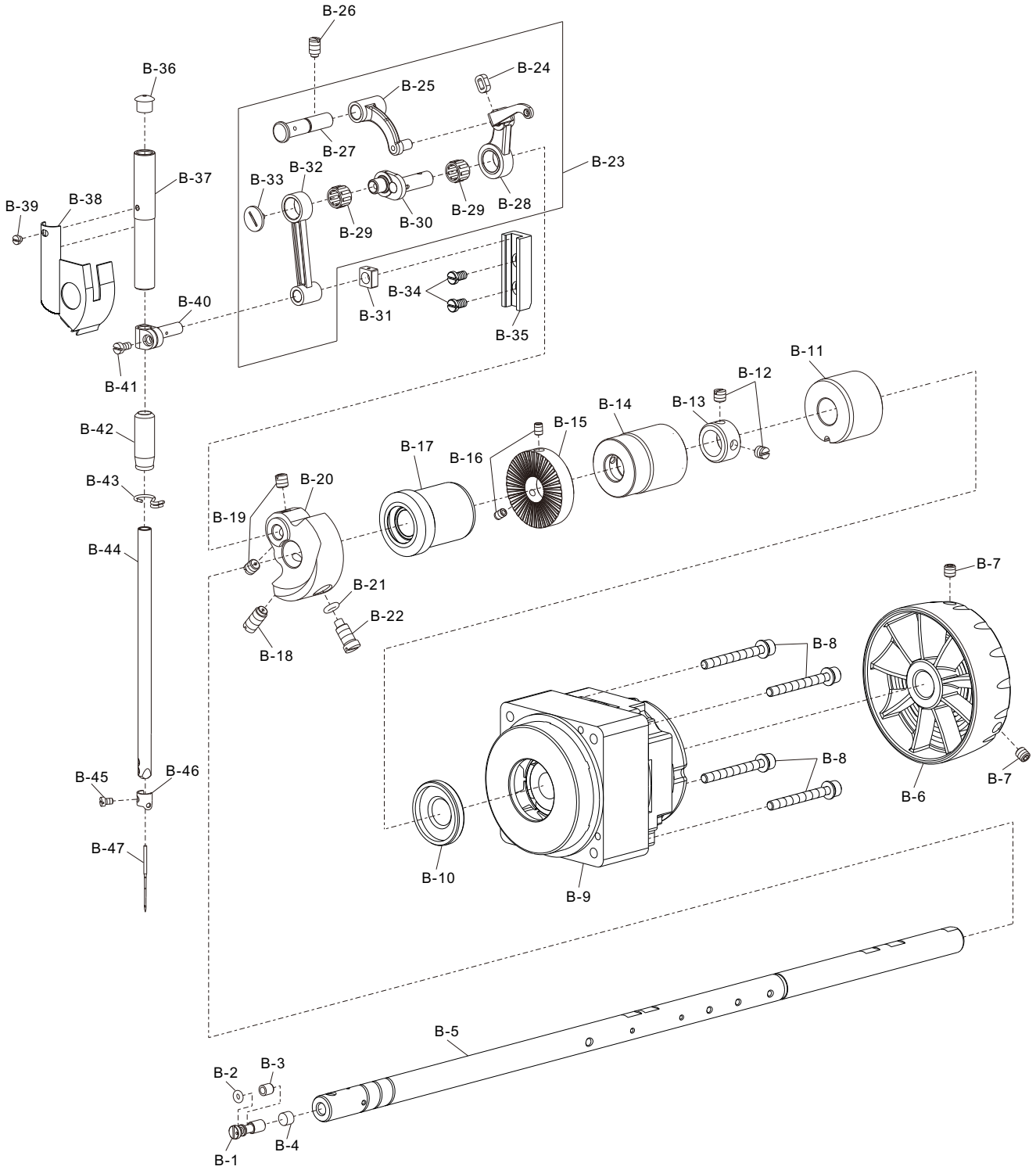

B

上轴、挑线分组件
Main Shaft & Thread Take-up Cover Components

序 号 Ref. No.	件 号 Part No.	名 称	Name of part	数 量 QTY	备 注 Remark
B-40	10043355	针杆连接柱	Joint pin	1	
B-41	10043356	SM9/64″×40螺钉	Screw SM9/64″×40	1	
B-42	10014117	针杆下轴套	Shaft sleeve	1	
B-42	10005916	针杆下轴套	Shaft sleeve	1	-5/H
B-43	10005943	针杆下套线钩	Thread guide	1	
B-44	10041608	针杆	Needle bar	1	
B-44	10041609	针杆	Needle bar	1	-5/H
B-45	10010588	SM1/8"×44螺钉	Screw SM1/8"×44	1	
B-46	10010591	针杆线钩	Thread guide	1	
B-46	10005945	针杆线钩	Thread guide	1	-5/H
B-47	*	DB×1 14#机针	Needle DB×1 14#	1	
B-47	*	DP×5 18#机针	Needle DP×5 18#	1	-5/H

“ * ” 具体内容需向客服咨询
“ * ” Specific content need to consult customer service

C

抬压脚分组件
Hang Lifter & Tension Release Components

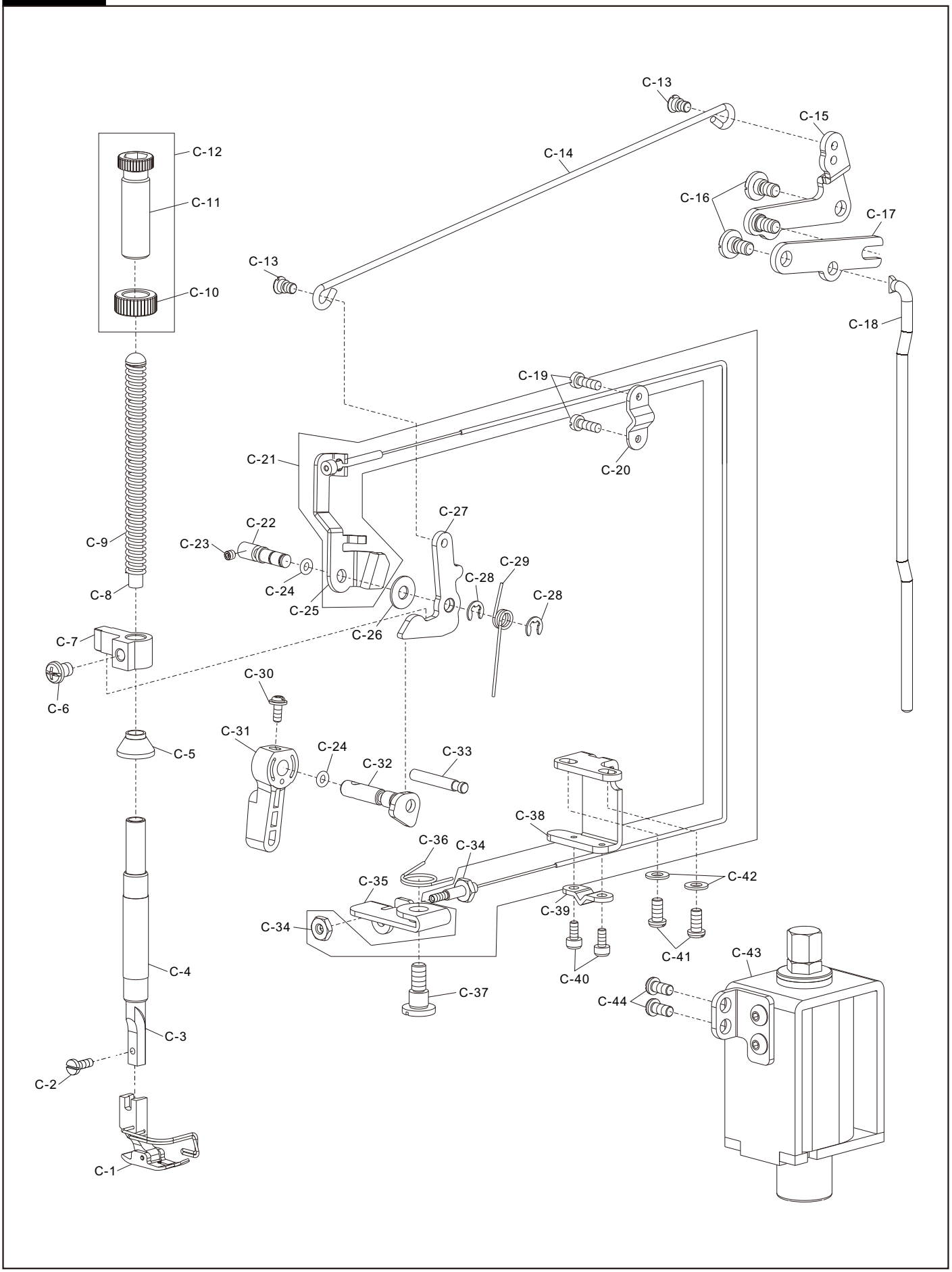

C

抬压脚分组件
Hang Lifter & Tension Release Components

序 号 Ref. No.	件 号 Part No.	名 称	Name of part	数 量 QTY	备 注 Remark
C-1	10052532	压脚组件	Presser foot ASM.	1	
C-1	10005982	压脚组件	Presser foot ASM.	1	-5/H
C-2	10010650	SM9/64″×40螺钉	Screw SM9/64″×40	1	
C-3	10010646	压杆	Presser bar	1	
C-4	10014118	压杆轴套	Shaft sleeve	1	
C-4	10005915	压杆轴套	Shaft sleeve	1	-5/H
C-5	10011457	压紧杆防油罩	Oil protector cover	1	
C-6	10000325	M6×8螺钉	Screw M6×8	1	
C-7	10039365	压杆导架	Presser guide bar bracket	1	
C-8	10004439	调压导杆	Presser guide bar	1	
C-9	10004473	调压弹簧	Spring	1	
C-10	10062022	调压螺母	Nut	1	
C-11	10062021	调压螺钉	Screw	1	
C-12	10062052	调压螺钉组件	Screw ASM.	1	
C-13	10010651	SM3/16″×32螺钉	Screw SM3/16″×32	2	
C-14	10061689	抬压脚拉杆	Lifting lever connecting rod	1	
C-15	10057556	抬压脚后杠杆组件	Lifting lever link components ASM.	1	
C-16	10010652	后杠杆轴位螺钉	Screw	2	
C-17	10057557	抬压脚连接板	Lifting lever connecting plate	1	
C-18	10057559	抬压脚顶杆	Connecting rod vertical	1	
C-19	10009037	M4×12螺钉	Screw M4×12	2	
C-20	10039378	钢丝绳压板	Platen	1	
C-21	10039380	抬压脚拉线组件	Foot lifter pull thread components ASM.	1	
C-22	10039373	松线顶板销	Pin	1	
C-23	10009074	M4×4螺钉	Screw M4×4	1	
C-24	10010027	3.68×1.78 O形圈	O-ring 3.68×1.78	2	
C-25	10039372	松线顶板	Tension release plate	1	
C-26	10050590	平垫圈	Snap ring	1	
C-27	10050188	压脚升降板	Lifting lever	1	
C-28	10013038	5×0.8挡圈	Closing ring 5×0.8	2	
C-29	10052046	压脚升降板复位簧	Spring	1	
C-30	10010016	SM9/64″×40螺钉	Screw SM9/64″×40	1	
C-31	10062023	压脚扳手	Hand lifter	1	
C-32	10050190	压脚扳手凸轮部件	Hand lifter CAM ASM.	1	
C-33	10039374	限位销	Pin	1	
C-34	10005834	SM3/16″×32螺母	Nut SM3/16″×32	2	
C-35	10008860	松线座	Loosing plate	1	
C-36	10008834	松线复位簧	Spring	1	
C-37	10012467	松线座螺钉	Screw	1	
C-38	10008811	松线钢绳座	Loosing line plate	1	
C-39	10013615	挡线板	Fixing shutter	1	
C-40	10006624	SM9/64″×40螺钉	Screw SM9/64″×40	2	
C-41	10008972	SM3/16″×28螺钉	Screw SM3/16″×28	2	
C-42	10011653	5.2×10.5×1垫圈	Washer 5.2×10.5×1	2	
C-43	10050041	抬压电磁铁	Electromagnes	1	
C-44	10000134	M5×10螺钉	Screw M5×10	4	

“ * ” 具体内容需向客服咨询
“ * ” Specific content need to consult customer service

D

勾线分组件
Hook Of Driving Shaft Components

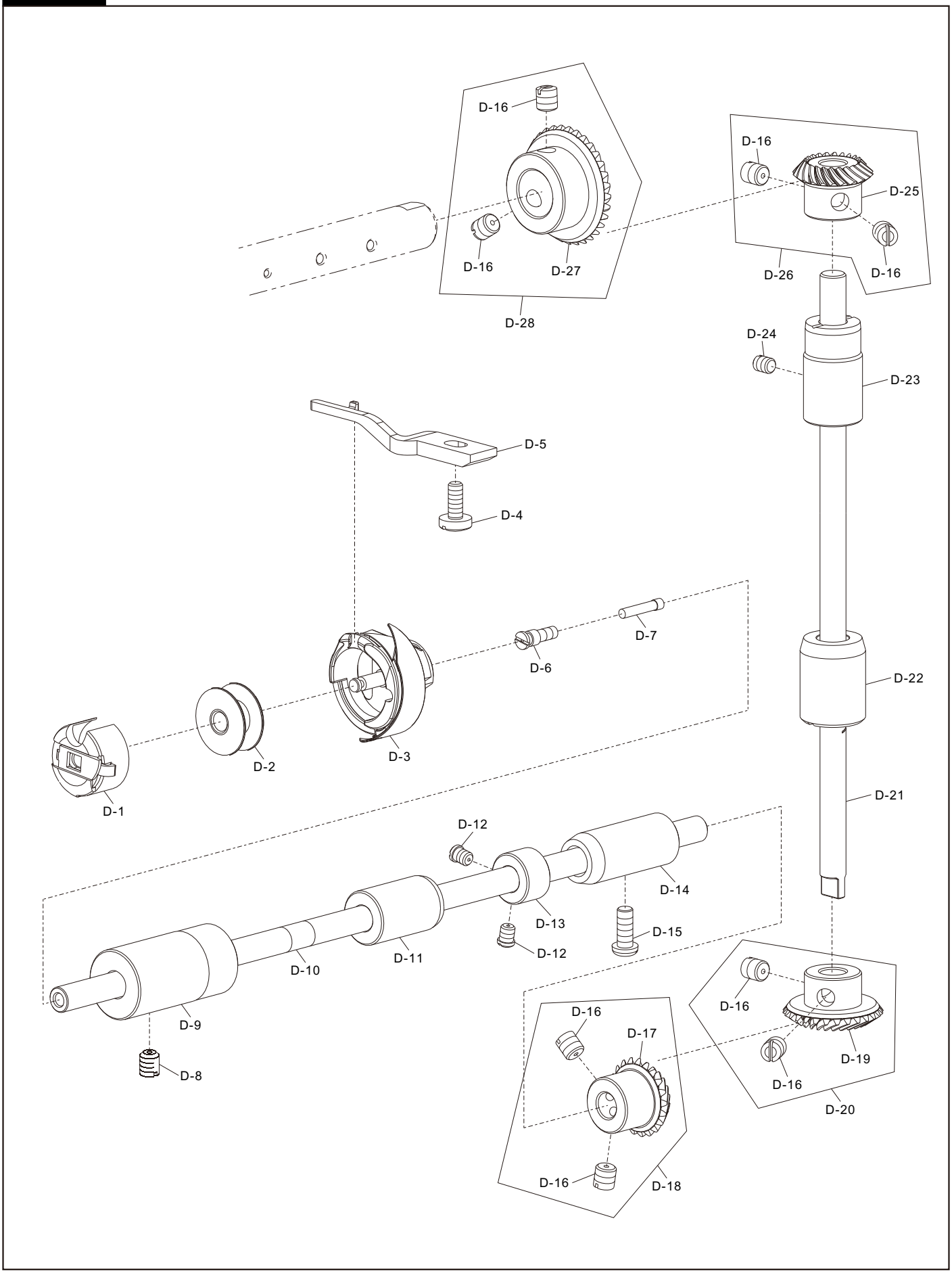

D

勾线分组件
Hook Of Driving Shaft Components

序 号 Ref. No.	件 号 Part No.	名 称	Name of part	数 量 QTY	备 注 Remark
D-1	*	梭壳	Bobbin case	1	
D-2	10025484	梭芯	Bobbin	1	
D-3	*	旋梭	Hook	1	
D-4	10010066	SM11/64"×40螺钉	Screw SM11/64"×40	1	
D-5	10031260	旋梭定位钩	Positioning finger	1	
D-6	10010064	下轴限油螺钉	Screw	1	
D-7	10010063	油芯	Oil wick	1	
D-8	10010506	SM15/64"×28螺钉	Screw SM15/64"×28	1	
D-9	10058811	下轴前轴套	Shaft sleeve	1	
D-9	10026781	下轴前轴套	Shaft sleeve	1	H
D-10	10008821	下轴	Hook driving shaft	1	
D-11	10008857	下轴中轴套	Shaft sleeve	1	
D-12	10010059	SM11/64"×40螺钉	Screw SM11/64"×40	2	
D-13	10010058	挡圈	Thrust collar	1	
D-14	10007266	下轴后轴套	Shaft sleeve	1	
D-15	10010030	SM3/16"×28螺钉	Screw SM3/16"×28	1	
D-16	10010065	SM1/4"×40螺钉	Screw SM1/4"×40	8	
D-17	10003937	下轴伞齿轮	Gear	1	
D-18	10002560	下轴伞齿轮组件	Gear ASM.	1	
D-19	10010029	竖轴下伞齿轮	Gear	1	
D-20	10002509	竖轴下伞齿轮组件	Gear ASM.	1	
D-21	10010057	竖轴	Upright shaft	1	
D-22	10007235	竖轴下轴套	Shaft sleeve	1	
D-23	10007267	竖轴上轴套	Shaft sleeve	1	
D-24	10039610	SM3/16″×28螺钉	Screw SM3/16″×28	1	
D-25	10010062	竖轴上伞齿轮	Gear	1	
D-26	10002561	竖轴上伞齿轮组件	Gear ASM.	1	
D-27	10010056	上轴伞齿轮	Gear	1	
D-28	10002445	上轴伞齿轮组件	Gear ASM.	1	

“ * ” 具体内容需向客服咨询
“ * ” Specific content need to consult customer service

E

送料分组件

Feed Mechanism Components

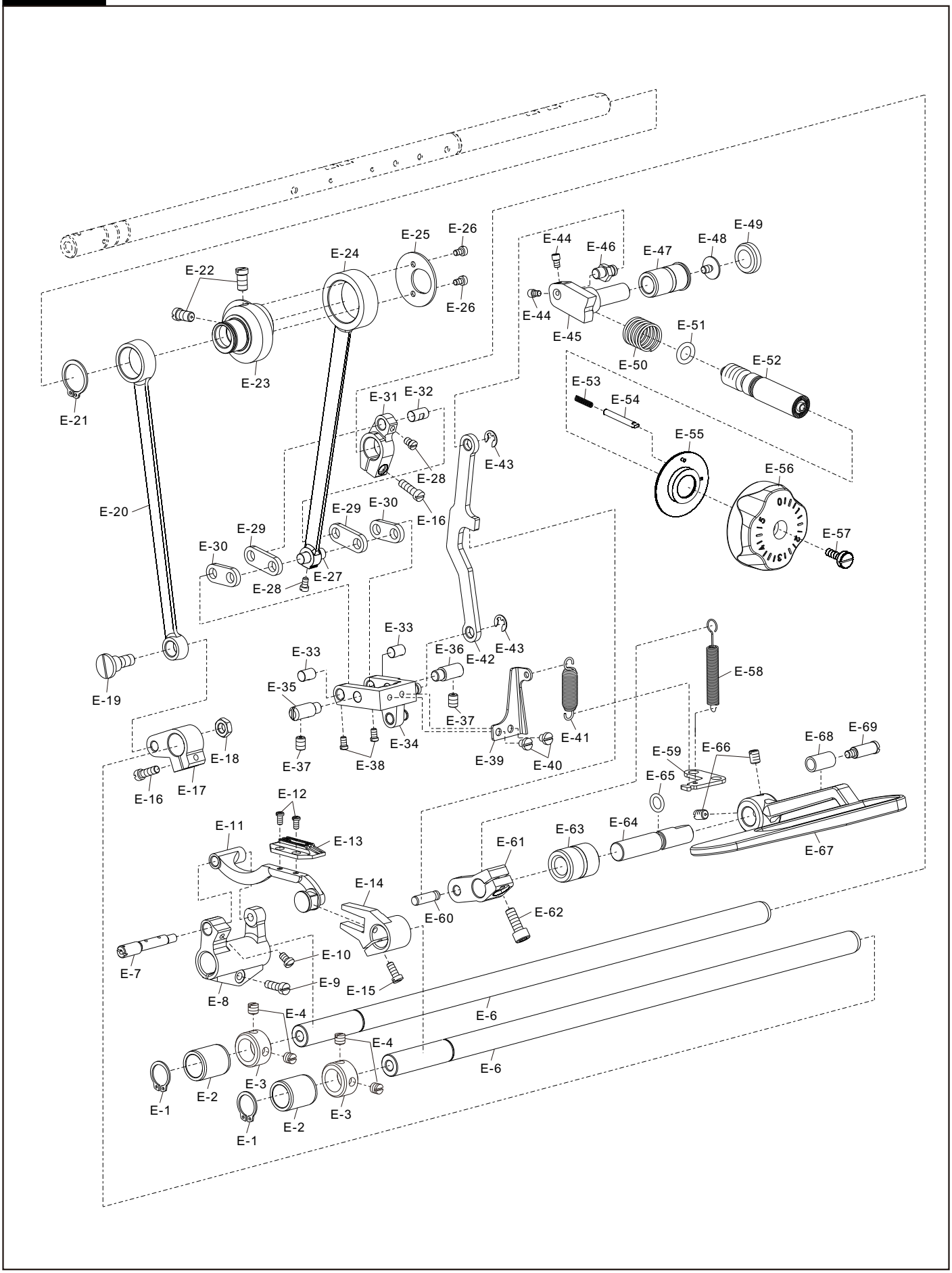

E

送料分组件
Feed Mechanism Components

序 号 Ref. No.	件 号 Part No.	名 称	Name of part	数 量 QTY	备 注 Remark
E-1	10010090	13.8×1挡圈	Closing ring 13.8×1	2	
E-2	10014116	送料抬牙轴轴套	Shaft sleeve	2	
E-3	10010542	挡圈	Thrust collar	2	
E-4	10005020	SM1/4"×40螺钉	Screw SM1/4"×40	4	
E-5	10010097	抬牙轴	Feed driving shaft	1	
E-6	10010073	送料轴	Feed rocker shaft	1	
E-7	10004440	牙架座偏心销	Pin	1	
E-8	10004474	牙架座	Feed bar driving crank	1	
E-9	10004993	SM3/16"×28螺钉	Screw SM3/16"×28	1	
E-10	10010074	SM11/64"×40螺钉	Screw SM11/64"×40	1	
E-11	20024474	牙架部件	Feed bar ASM.	1	
E-11	20019012	牙架部件	Feed bar ASM.	1	H
E-12	10010099	SM1/8"×44螺钉	Screw SM1/8"×44	2	
E-13	10052531	送料牙	Feed dog	1	
E-13	10026357	送料牙	Feed dog	1	S7
E-13	10007322	送料牙	Feed dog	1	-5
E-13	10038413	送料牙	Feed dog	1	H
E-14	10010100	抬牙叉形曲柄	Crank	1	
E-14	10030200	抬牙叉形曲柄	Crank	1	S7/H
E-15	10004628	SM11/64"×40螺钉	Screw SM11/64"×40	1	
E-16	10010095	SM3/16"×28螺钉	Screw SM3/16"×28	2	
E-17	10010086	抬牙后曲柄	Crank	1	
E-18	10004475	SM9/32″×28螺母	Nut SM9/32″×28	1	
E-19	10010091	抬牙连杆轴位螺钉	Screw	1	
E-20	10010084	抬牙连杆	Connecting rod	1	
E-21	10010089	18.5×1.2挡圈	Closing ring 18.5×1.2	1	
E-22	10010092	SM1/4"×40螺钉	Screw SM1/4"×40	2	
E-23	10010115	送料偏心轮	Feed drive eccentric cam	1	
E-23	10005991	送料偏心轮	Feed drive eccentric cam	1	S7/H
E-24	10010072	送料连杆	Connecting rod	1	
E-24	10006004	送料连杆	Connecting rod	1	S7/H
E-25	10010098	送料偏心轮盖板	Thrust cover	1	
E-25	10005992	送料偏心轮盖板	Thrust cover	1	S7/H
E-26	10010643	SM9/64″×40螺钉	Screw SM9/64″×40	2	
E-27	10010069	送料连杆销	Pin	1	
E-28	10010071	SM9/64"×40螺钉	Screw SM9/64"×40	2	
E-29	10010068	送料长摆动板	Connecting plate	2	
E-30	10010075	送料短摆动板	Connecting plate	2	
E-31	10010076	送料曲柄	Crank	1	
E-32	10010096	送料曲柄销	Pin	1	
E-33	10010087	短摆动板连接销	Pin	2	
E-34	10012775	送料摆动板座部件	Feed adjusting ASM.	1	
E-34	10035665	送料摆动板座部件	Feed adjusting ASM.	1	S7/H
E-35	10010102	送料摆动板座左销	Pin	1	
E-36	10058783	送料摆动板座右销	Pin	1	
E-37	10010678	SM15/64″×28螺钉	Screw SM15/64″×28	2	
E-38	10010197	SM9/64"×40螺钉	Screw SM9/64"×40	2	

“ * ” 具体内容需向客服咨询
“ * ” Specific content need to consult customer service

E

送料分组件
Feed Mechanism Components

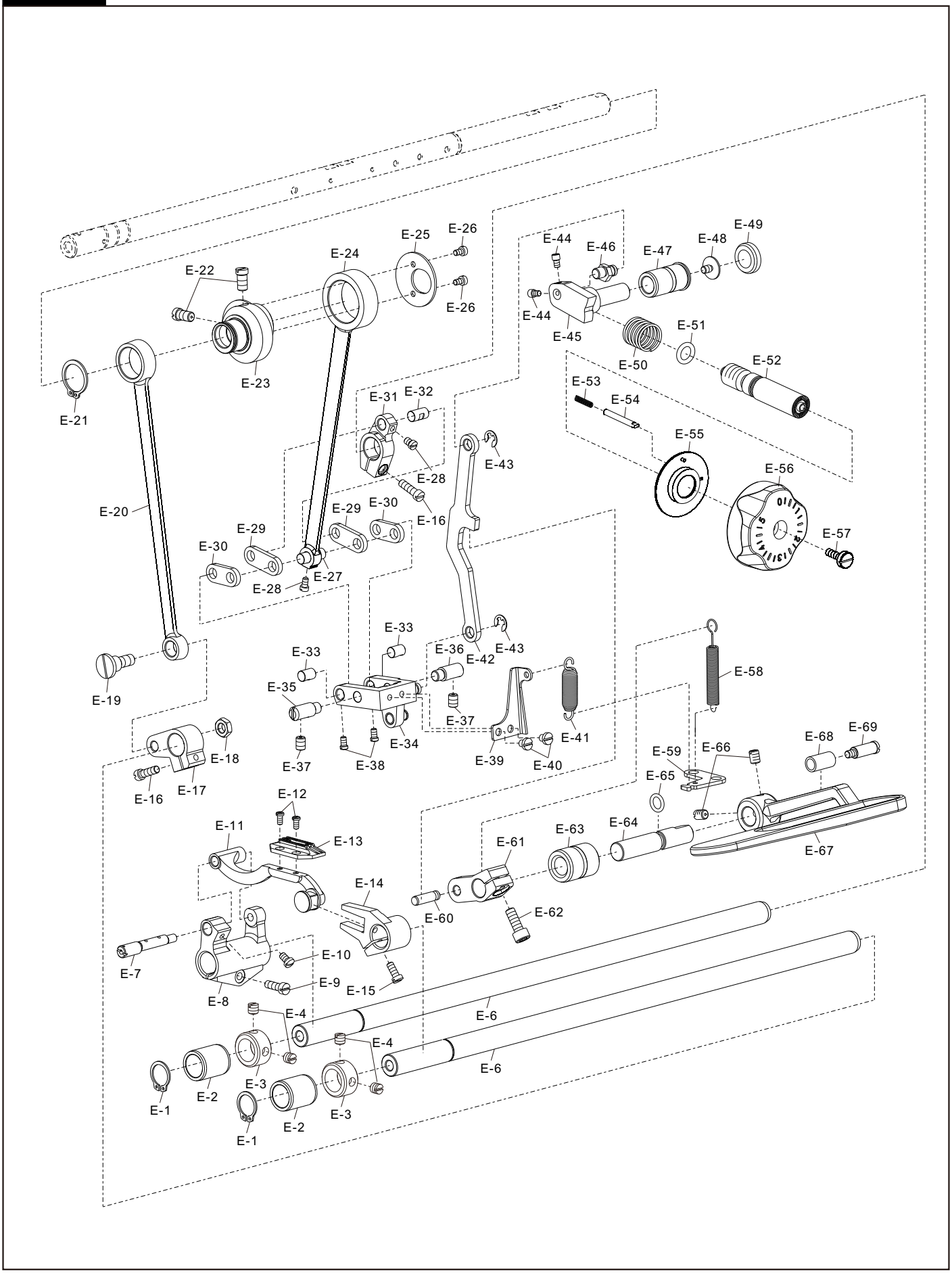

E

送料分组件
Feed Mechanism Components

序 号 Ref. No.	件 号 Part No.	名 称	Name of part	数 量 QTY	备 注 Remark
E-39	10010282	摆动板座复位板	Plate	1	
E-40	10010285	SM11/64"×40螺钉	Screw SM11/64"×40	2	
E-41	10012796	摆动板座复位簧	Spring	1	
E-41	10012990	摆动板座复位簧	Spring	1	S7/H
E-42	10008852	倒送料连杆	Feed adjust rod	1	
E-42	10037069	倒送料连杆	Feed adjust rod	1	S7/H
E-43	10010649	5.1×0.6挡圈	Closing ring 5.1×0.6	2	
E-44	10051742	SM9/64″×40螺钉	Screw SM9/64″×40	2	
E-45	10053340	送料调节器	Feed regulator	1	
E-45	10027597	送料调节器	Feed regulator	1	S7/H
E-46	10026886	偏心销	Pin	1	
E-47	10008956	送料调节器轴套	Shaft sleeve	1	
E-48	10010238	送料调节器轴端螺钉	Screw	1	
E-49	10008975	橡胶塞	Rubber plug	1	
E-50	10051621	旋钮复位簧	Spring	1	
E-51	10010240	9.2×2.7 O形圈	O-ring 9.2×2.7	1	
E-52	10062380	送料调节螺柱	Screw	1	
E-53	10013869	旋钮锁簧	Spring	1	
E-54	10062381	旋钮止动销	Pin	1	
E-54		旋钮止动销	Pin	1	S7/H
E-55	10051578	旋钮止动盘组件	Arresting disc ASM.	1	
E-55	10053153	旋钮止动盘组件	Arresting disc ASM.	1	S7/H
E-56	10063091	送料距旋钮	Feed dial	1	
E-56	10063604	送料距旋钮	Feed dial	1	S7/H
E-57	10051845	SM3/16"×28螺钉	Screw SM3/16"×28	1	
E-58	10004430	倒送料拉簧	Spring	1	
E-58	10012991	倒送料拉簧	Spring	1	S7/H
E-59	10010235	拉簧固定板	Plate	1	
E-59	10012987	拉簧固定板	Plate	1	S7/H
E-60	10010287	倒送料曲柄销	Pin	1	
E-61	10039853	倒送料曲柄	Crank	1	
E-61	10031548	倒送料曲柄	Crank	1	S7/H
E-62	10009008	倒送料曲柄螺钉	Screw	1	
E-63	10014119	倒送料轴轴套	Shaft sleeve	1	
E-64	10062033	倒送料轴	Reverse feed shaft	1	
E-65	10010243	7.8×2 O形圈	O-ring 7.8×2	1	
E-66	10040504	M6螺钉	Screw M6	2	
E-67	20023712	倒送料扳手	Reverse feed control lever	1	
E-68	10050706	限位螺钉套	Rubber sleeve	1	
E-69	10050707	限位螺钉	Screw	1	

“ * ” 具体内容需向客服咨询
“ * ” Specific content need to consult customer service

F

送料调节分组件
Feed Regulating Components

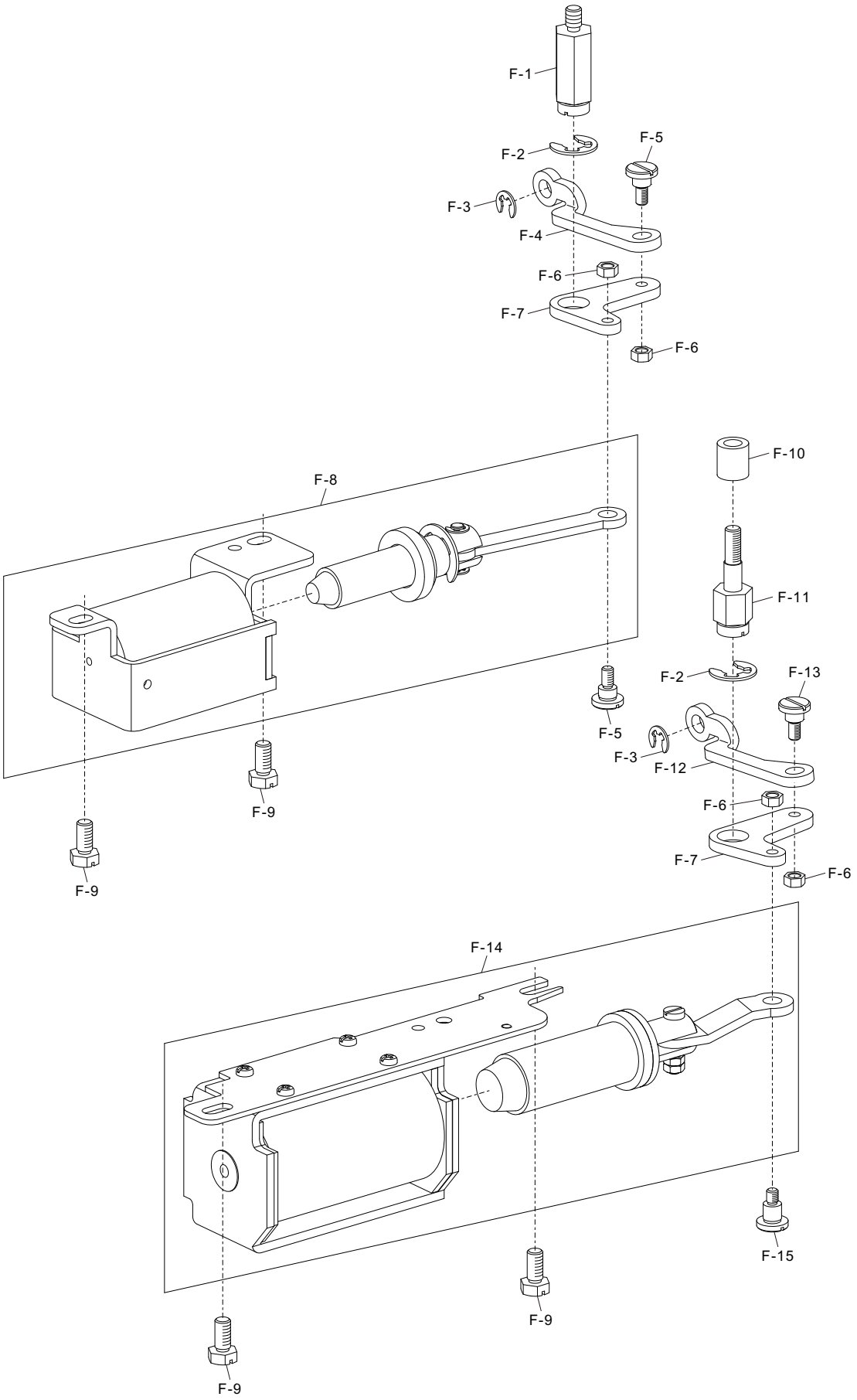

F

送料调节分组件
Feed Regulating Components

序 号 Ref. No.	件 号 Part No.	名 称	Name of part	数 量 QTY	备 注 Remark
F-1	10012505	油泵连接螺柱	Screw	1	
F-2	10003281	9×1挡圈	Closing ring 9×1	1	
F-3	10024748	5×0.8挡圈	Closing ring 5×0.8	1	
F-4	10053339	自动倒送料拉杆	Reverse feed connecting plate	1	
F-5	10012983	SM15/64"×28螺钉	Screw SM15/64"×28	2	
F-6	10012985	SM15/64"×28螺母	Nut SM15/64"×28	2	
F-7	10012989	自动倒送料曲柄	Connecting arm	1	
F-8	10031416	倒缝电磁铁组件	Backstitch electromagnet ASM.	1	
F-9	10050422	SM15/64"×28螺钉	Screw SM15/64"×28	2	
F-10	10013002	油泵连接衬套	Bushing	1	-5/S7/H
F-11	10013001	油泵连接螺柱	Screw	1	-5/S7/H
F-12	10012797	自动倒送料拉杆	Reverse feed connecting plate	1	-5/S7/H
F-13	10012983	SM15/64"×28螺钉	Screw SM15/64"×28	1	-5/S7/H
F-14	10037310	倒缝电磁铁组件	Backstitch electromagnet ASM.	1	-5/S7/H
F-15	10012986	SM15/64"×28螺钉	Screw SM15/64"×28	1	-5/S7/H

“ * ” 具体内容需向客服咨询
“ * ” Specific content need to consult customer service

G

剪线分组件
Thread trimmer Components

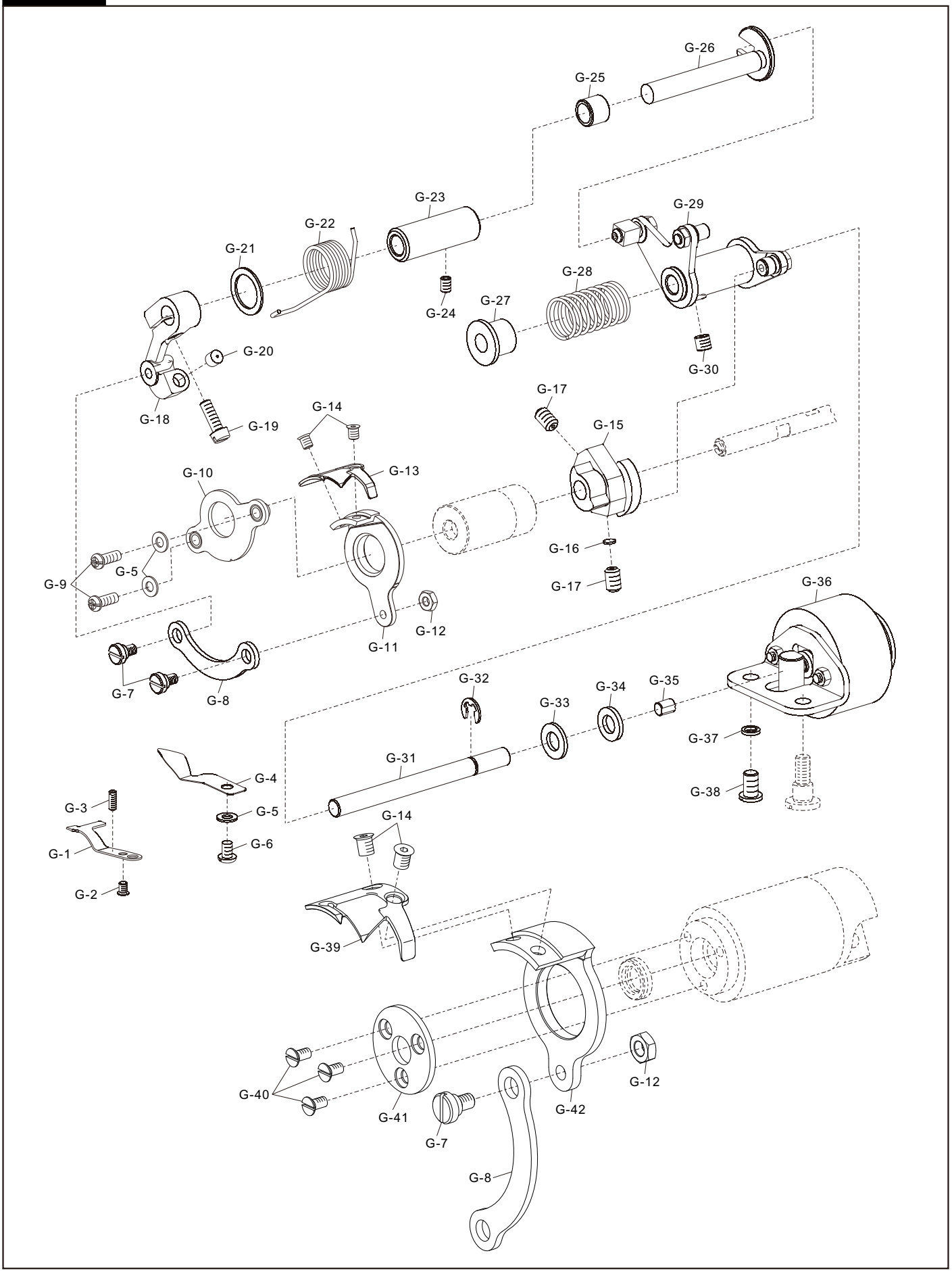

G

剪线分组件
Thread trimmer Components

序 号 Ref. No.	件 号 Part No.	名 称	Name of part	数 量 QTY	备 注 Remark
G-1	10011421	定刀	Fixed knife	1	
G-2	10011422	SM9/64"×40螺钉	Screw SM9/64"×40	1	
G-3	10024496	SM1/8″×40螺钉	Screw SM1/8″×40	1	
G-4	10058067	分线器	Dispart	1	
G-4	10062533	分线器	Dispart	1	H
G-5	10013154	9×4.5×0.8垫圈	Washer 9×4.5×0.8	3	
G-6	10014474	SM11/64"×40螺钉	Screw SM11/64"×40	1	
G-7	10011514	SM11/64″×40螺钉	Screw SM11/64"×40	2	
G-8	10031612	刀轴连杆	Knife shaft crack rod	1	
G-9	10010900	SM11/64"×40螺钉	Screw SM11/64"×40	2	
G-10	10008856	刀架压板组件	Knife holder ASM.	1	
G-11	10004640	动刀架	Round knife bracket	1	
G-12	10011578	SM11/64"×40螺母	Nut SM11/64"×40	1	
G-13	10011494	动刀	Round knife	1	
G-13	10030280	动刀	Round knife	1	-5
G-14	10011588	SM11/64"×40螺钉	Screw SM11/64"×40	2	
G-15	10010736	剪线凸轮	Thread trimmer cam	1	
G-16	10023739	剪线凸轮垫	Cam collar	1	
G-17	10013465	SM1/4"×40螺钉	Screw SM1/4"×40	2	
G-18	10058043	切线驱动曲柄	Trimming crank	1	
G-19	10008863	SM3/16"×32螺钉	Screw SM3/16"×32	1	
G-20	10011580	曲柄止动块	Block	1	
G-21	10008865	15.3×21×1垫圈	Washer 15.3×21×1	1	
G-22	10011649	曲柄复位簧	Spring	1	
G-23	10012454	切线轴套	Shaft sleeve	1	
G-24	10012062	SM11/64"×40螺钉	Screw SM11/64"×40	1	
G-25	10011630	曲柄轴短套	Short bushing	1	
G-26	10008866	切刀驱动曲柄轴	Trimming crank shaft	1	
G-27	10014196	弹簧端盖	Spring cover	1	
G-28	10008812	弹簧	Spring	1	
G-29	10011686	切线凸轮曲柄组件	Trimming cam crank ASM.	1	
G-30	10008862	SM1/4"×40螺钉	Screw SM1/4"×40	1	
G-31	10011697	切刀驱动轴	Trimming shaft	1	
G-32	10009654	6×1挡圈	Closing ring 6×1	1	
G-33	10003031	8.4×16×1.6垫圈	Washer 8.4×16×1.6	1	
G-34	10011650	8.2×15×2垫圈	Washer 8.2×15×2	1	
G-35	10050266	消音塞	Sound deadening plug	1	
G-36	10031414	剪线电磁铁组件	Thread trimmer solenoid ASM.	1	
G-37	10003077	6弹簧垫圈	Washer 6	1	
G-38	10011605	SM1/4"×28螺钉	Screw SM1/4"×28	1	
G-39	10026782	动刀	Round knife	1	H
G-40	10009626	M3×4.35螺钉	Screw M3×4.35	1	H
G-41	10013026	刀架压板	Knife holder	1	H
G-42	10026783	动刀架	Round knife bracket	1	H

“ * ” 具体内容需向客服咨询
“ * ” Specific content need to consult customer service

H

电控分组件
Drive-by-wire Components

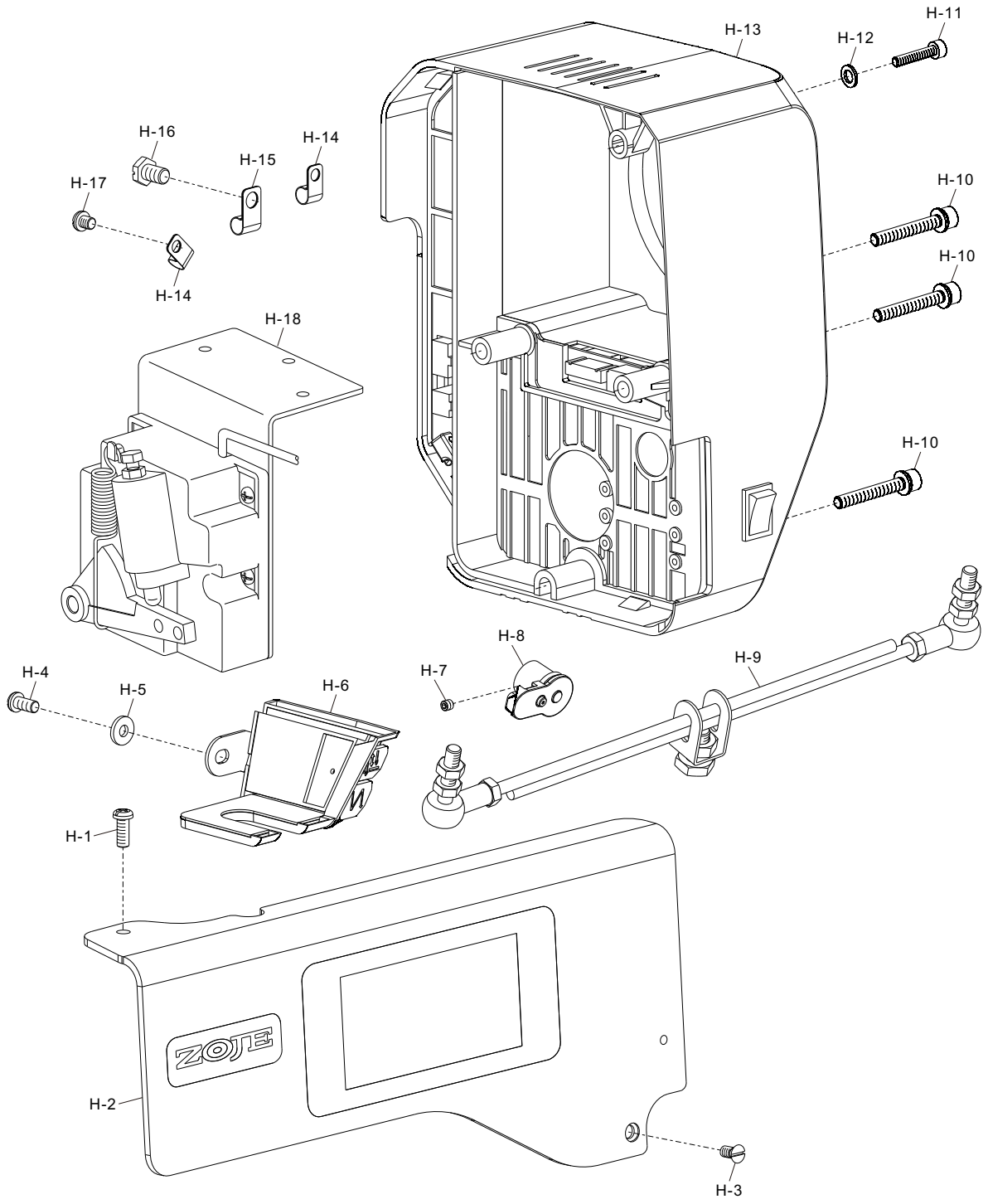

H

电控分组件
Drive-by-wire Components

序 号 Ref. No.	件 号 Part No.	名 称	Name of part	数 量 QTY	备 注 Remark
H-1	10063944	SM3/16″×28螺钉	Screw SM3/16″×28	1	
H-2	10062567	操作屏组件	Operation screen ASM.	1	
H-3	10009005	SM11/64″×40螺钉	Screw SM11/64″×40	1	
H-4	10008934	SM3/16″×28螺钉	Screw SM3/16″×28	1	
H-5	10011168	4.8×11.6×1.6垫圈	Washer 4.8×11.6×1.6	1	
H-6	10063246	机头灯部件	Led lamp ASM.	1	
H-7	10009074	M4×4螺钉	Screw M4×4	1	
H-8	10062034	电子夹线器	Electromagnet tension disk	1	
H-9	10042945	踏板连杆组件	Pedal control rod ASM.	1	
H-10	10049837	M5×35螺钉	Screw M5×35	3	
H-11	10012080	M4×20螺钉	Screw M4×20	1	
H-12	10006115	5.3×9×1垫圈	Washer 5.3×9×1	1	
H-13	10062566	电控箱	Controll box	1	
H-13		电控箱	Controll box	1	-5/S7/H
H-14	10062062	电线夹1	Cord holder 1	2	
H-15	10062063	电线夹2	Cord holder 2	1	
H-16	10062046	安装接头螺钉	Screw	1	
H-17	10010899	SM3/16″×28螺钉	Screw SM3/16″×28	1	
H-18	10031424	踏板组件	Pedal unit ASM.	1	

“ * ” 具体内容需向客服咨询
“ * ” Specific content need to consult customer service

I

润滑分组件
Lubrication Components

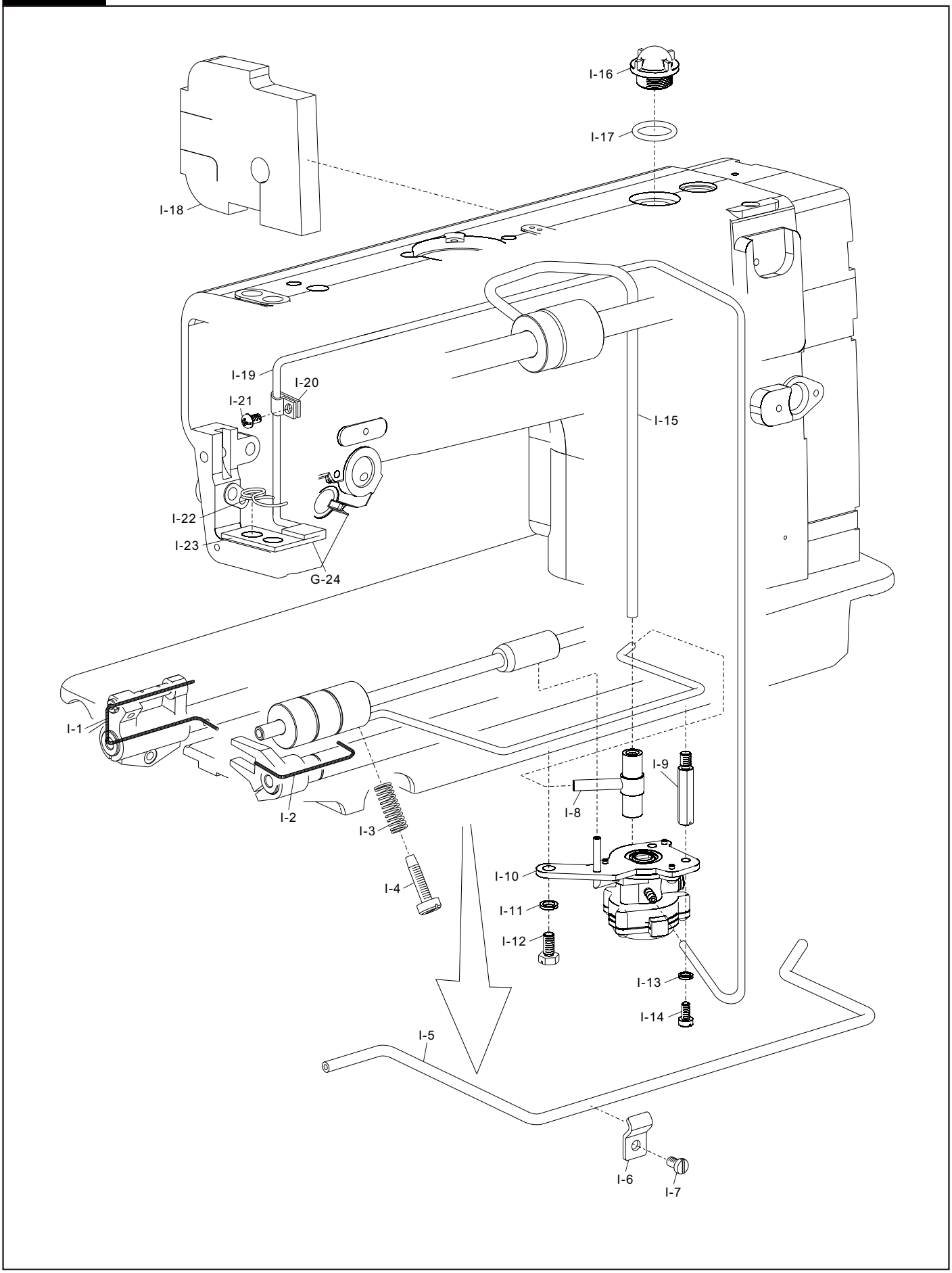

I

润滑分组件
Lubrication Components

序 号 Ref. No.	件 号 Part No.	名 称	Name of part	数 量 QTY	备 注 Remark
I-1	10008067	φ2油线(430mm)	Oil wick(430mm)	1	
I-2	10008067	φ2油线(400mm)	Oil wick(400mm)	1	
I-3	10008806	旋梭油量调节簧	Spring	1	
I-4	10008831	旋梭油量调节螺钉	Screw	1	
I-5	10008807	旋梭供油管	Oil tube	1	
I-6	10050424	旋梭供油管压板	Tube holder	1	
I-7	10013269	SM9/64"×40螺钉	Screw SM9/64"×40	1	
I-8	10010340	供油管接头	Oil connection	1	
I-9	10012505	油泵连接螺柱	Screw	1	
I-10	10008817	油泵部件	Oil pump ASM.	1	
I-11	10003077	6弹簧垫圈	Washer 6	1	
I-12	10050422	SM15/64"×28螺钉	Screw SM15/64"×28	1	
I-13	10005537	5弹簧垫圈	Washer 5	1	
I-14	10010066	SM11/64"×40螺钉	Screw SM11/64"×40	1	
I-15	10048653	上轴供油管	Oil tube	1	
I-16	10008938	油窗	Oil sight window	1	
I-17	10008939	19×3 O形圈	O-ring 19×3	1	
I-18	10063945	挡油海绵	Foam rubber	1	
I-19	10007795	φ3.5×φ5油管(690mm)	Oil tube(690mm)	1	
I-20	10004476	回油管夹	Holder	1	
I-21	10008934	SM3/16″×28螺钉	Screw SM3/16″×28	1	
I-22	10042077	回油毛毡夹	Oil felt preser	1	
I-23	10054207	回油毛毡	Roler felt	1	
I-24	20019651	回油管组件	Oil return tube ASM.	1	

“ * ” 具体内容需向客服咨询
“ * ” Specific content need to consult customer service

J

油盘、膝抬压脚分组件
Presser Foot Components Of Oil Plate Knee Lift

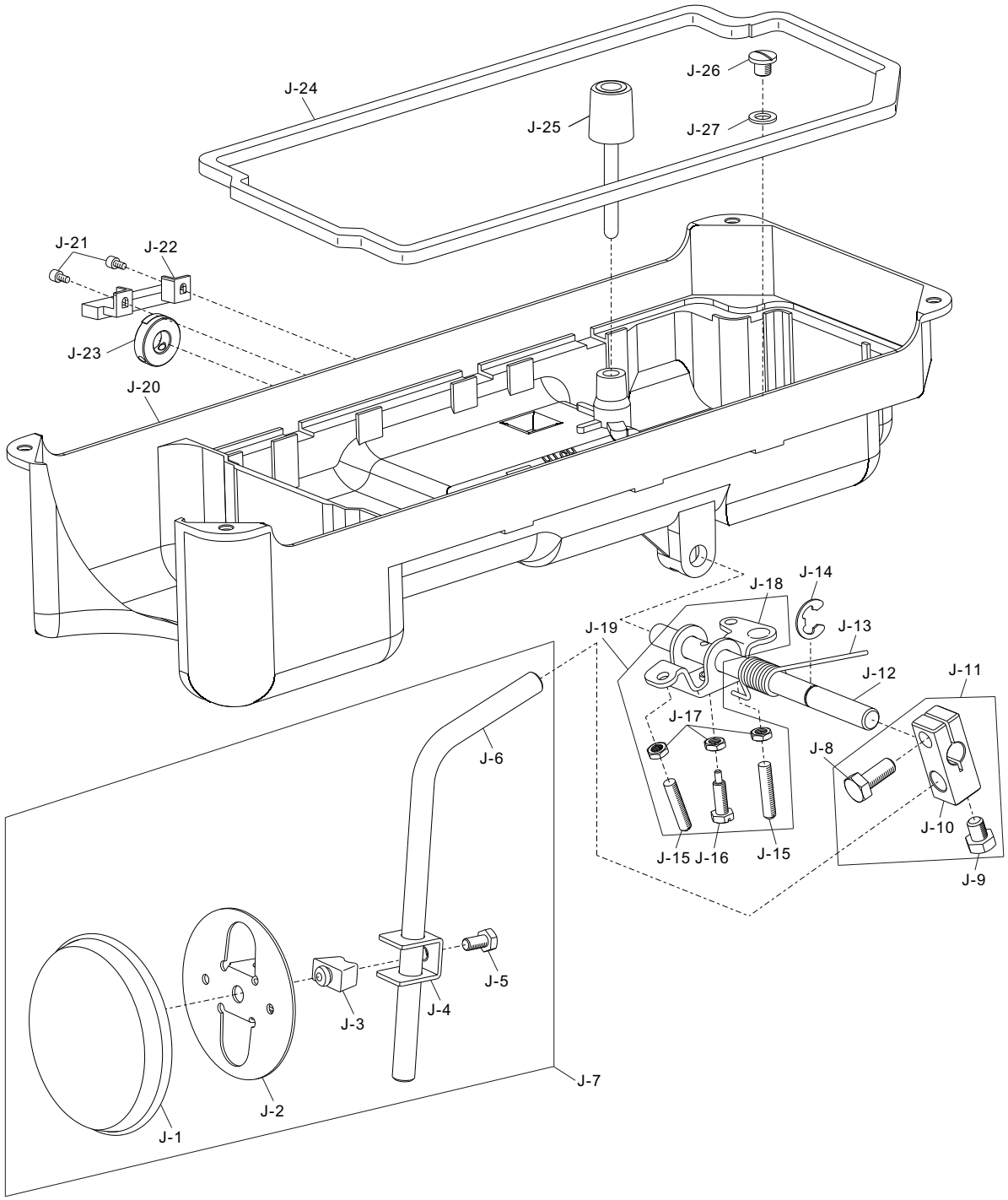

J

油盘、膝抬压脚分组件
Presser Foot Components Of Oil Plate Knee Lift

序 号 Ref. No.	件 号 Part No.	名 称	Name of part	数 量 QTY	备 注 Remark
J-1	10004223	操纵板软垫	Knee pressing cover	1	
J-2	10003891	操纵板	Knee pressing plate	1	
J-3	10003900	操纵板垫	Knee pressing plate rubber	1	
J-4	10003897	操纵杆接头	Knee pressing plate holder	1	
J-5	10003894	SM15/64"×28螺钉	Screw SM15/64"×28	1	
J-6	10003901	操纵杆	Knee pressing plate rod	1	
J-7	10009985	操纵杆部件	Knee pressing plate ASM.	1	
J-8	10002613	M8×20螺钉	Screw M8×20	1	
J-9	10002610	M8×10螺钉	Screw M8×10	1	
J-10	10003896	抬压脚操纵杆接头	Connection	1	
J-11	10002562	抬压脚操纵杆接头组件	Connection ASM.	1	
J-12	10003899	抬压脚轴	Knee pressing shaft	1	
J-12	10058503	抬压脚轴	Knee pressing shaft	1	D5
J-13	10003893	双向曲柄扭簧	Spring	1	
J-14	10002559	9.8×1挡圈	Closing ring 9.8×1	1	
J-15	10003895	M6×30螺钉	Screw M6×30	2	
J-16	10003898	双向曲柄螺钉	Screw	1	
J-17	10003890	M6×3.2螺母	Nut M6×3.2	3	
J-18	10009987	抬压脚双向曲柄	Crank	1	
J-19	10002563	抬压脚双向曲柄组件	Crank ASM.	1	
J-20	10008313	油盘	Oil reservoir	1	
J-20	10057328	油盘	Oil reservoir	1	D5
J-21	10002975	M3×6螺钉	Screw M3×6	2	D5
J-22	10057330	膝提助力传感器组件	Sensor assembly	1	D5
J-23	10057329	感应磁铁组件	Induction magnet ASM.	1	D5
J-24	10014194	油盘垫	Oil reservoir gasket	1	
J-25	10009984	抬压脚顶销	Pin	1	
J-26	10009991	SM5/16"×24螺钉	Screw SM5/16"×24	1	
J-27	10009988	7.8×13.5×1.3垫圈	Rubber ring 7.8×13.5×1.3	1	

“ * ” 具体内容需向客服咨询
“ * ” Specific content need to consult customer service

K

过线架分组件
Components Of Thread-running Stand

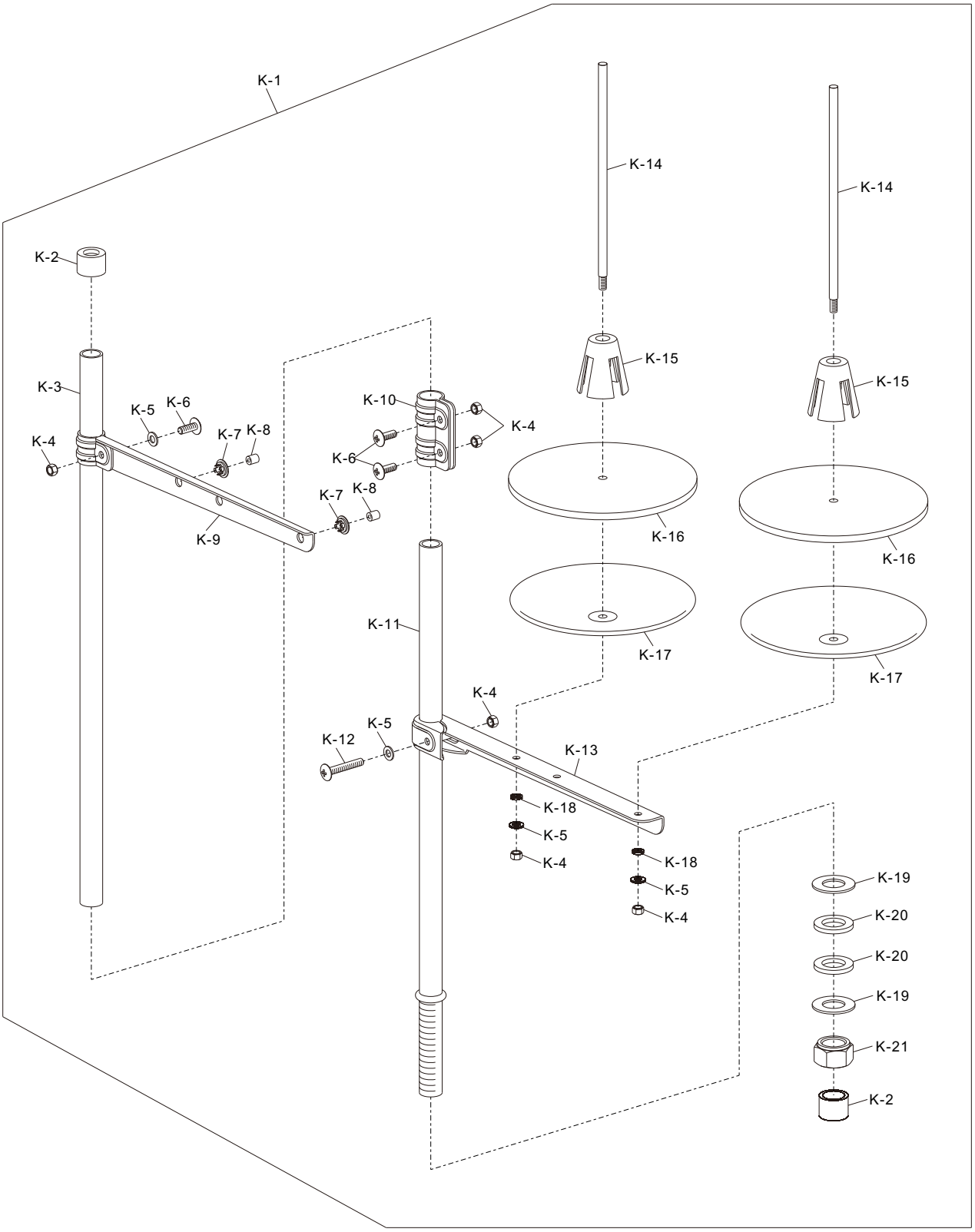

K

过线架分组件
Components Of Thread-running Stand

序 号 Ref. No.	件 号 Part No.	名 称	Name of part	数 量 QTY	备 注 Remark
K-1	10007130	二线线架部件	Thread stand ASM.	1	
K-2	10004282	撑管套	Column cap	2	
K-3	10004293	线架上撑管	Column pipe(upper)	1	
K-4	10002953	M5螺母	Nut M5	6	
K-5	10003022	5平垫圈	Washer 5	4	
K-6	10003301	M5×14螺钉	Screw M5×14	3	
K-7	10004285	过线管套	Thread guide bushing	2	
K-8	10004289	过线管	Thread guide pipe	2	
K-9	10004298	上过线架	Thread hanger(upper)	1	
K-10	10004286	撑管夹	Column pipe connector	1	
K-11	10004291	线架下撑管	Column pipe(lower)	1	
K-12	10003312	M5×30螺钉	Screw M5×30	1	
K-13	10004284	下过线架	Thread hanger(lower)	1	
K-14	10004288	线轴	Spool pin	2	
K-15	10004287	线盘塑料压块	Spool cushion	2	
K-16	10004281	线盘软垫	Spool mat	2	
K-17	10004299	线盘	Spool seat disc	2	
K-18	10003077	5弹簧垫圈	Washer 5	2	
K-19	10004290	16×30×1.5垫圈	Washer 16×30×1.5	2	
K-20	10004295	16.5×27.5×3垫圈	Washer 16.5×27.5×3	2	
K-21	10002985	M16螺母	Nut M16	1	

“ * ” 具体内容需向客服咨询
“ * ” Specific content need to consult customer service

L

附件
Auxiliaries

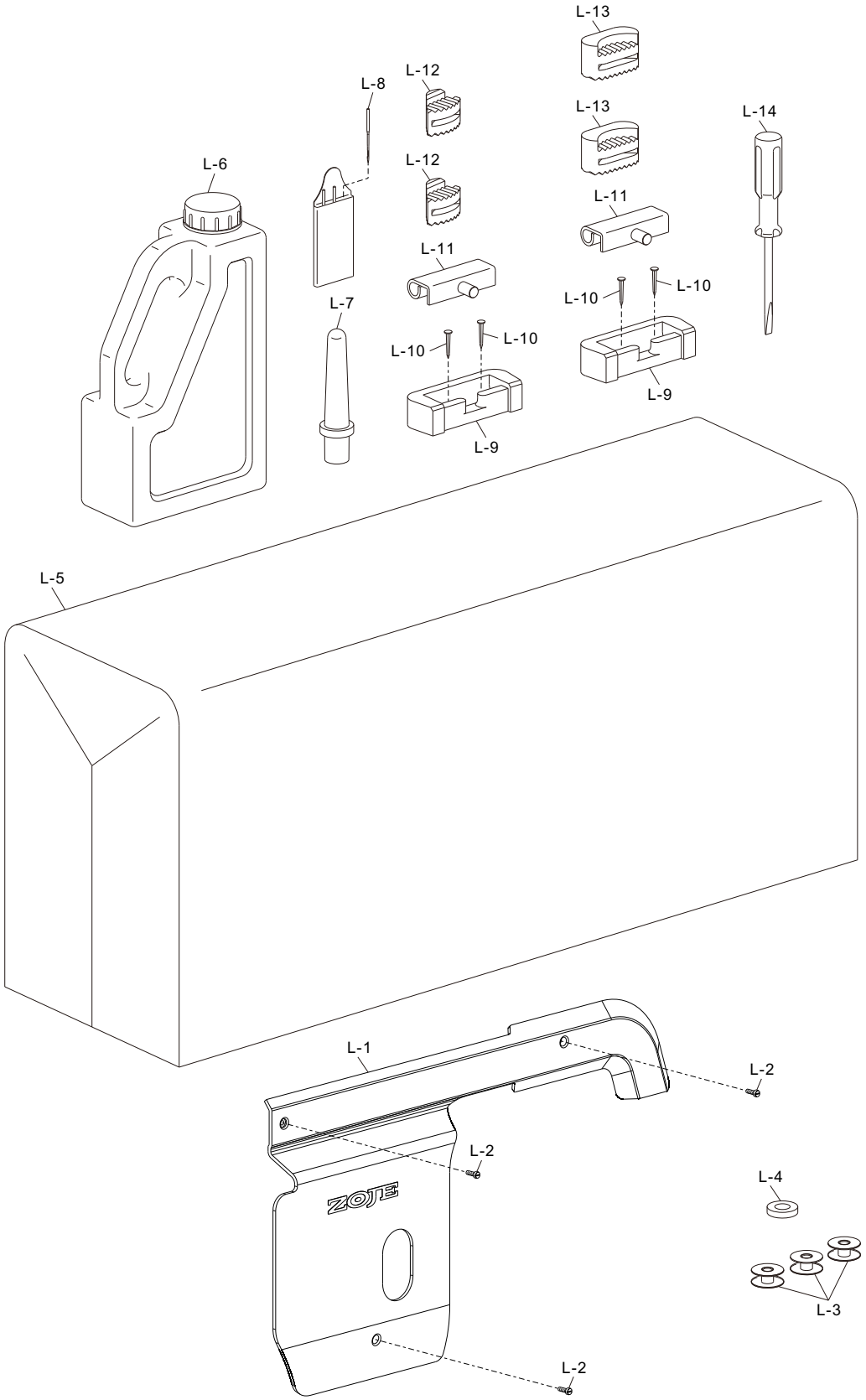

L

附件
Auxiliaries

序 号 Ref. No.	件 号 Part No.	名 称	Name of part	数 量 QTY	备 注 Remark
L-1	10062055	后窗塑料罩	Plastic cover	1	
L-2	10003060	M2.5×8螺钉	Screw M2.5×8	3	
L-3	10025484	梭芯	Bobbin	3	
L-4	10003892	油盘磁铁	Oil reservoir magnet	1	
L-5	10008849	机头罩	Head cover	1	
L-6	10060866	油箱	Oil bottle with oil	1	
L-7	10050425	机头支柱	Head pole	1	
L-8	*	DB×1 14#机针	Needle DB×1 14#	3	
L-8	*	DP×5 18#机针	Needle DP×5 18#	3	-5/H
L-9	10011041	机头连接钩座	Head connecting hook socket	2	
L-10	10003889	机头连接钩座钉	Nail	4	
L-11	10004466	机头连接钩部件	Head connecting hook	2	
L-12	10009986	油盘支座	Oil reservoir seat	2	
L-13	10009993	机头油盘座垫	Oil reservoir cushion	2	
L-14	10010995	中螺丝刀	Screw driver , middle	1	

“ * ” 具体内容需向客服咨询
“ * ” Specific content need to consult customer service